+2 Physics
Minimum Learning Material for March -2017 Public Examination

BOOK BACK ONE MARK QUESTIONS AND ANSWERS

www.Padasalai.Net

Prepared by:

B.ELANGOVAN. M.Sc., M.Ed., M.Phil.,

(Tamil Nadu Dr. Radhakrishnan Best Teacher Award - 2011 recipient)

Post Graduate Teacher in Physics

(Date of Appointment : 03-12-1984),

Pachaiyappa's Hr.Sec.School, Kanchipuram - 631501.

Phone: 9444438464

****

http://www.trbtnpsc.com/2013/07/latest-12th-study-materials-2013.html

+2 Physics - One mark questions

Minimum Learning Material (Units: 1, 4, 5, 6 and 8)

+2 Physics Minimum Learning Material

Unit- 1 Electrostatics

1. A glass rod rubbed with silk acquires a charge of $+8 \times 10^{-12}$ C. The number of electrons it has gained or lost
   (a) 5×10^{-7} (gained) (b) 5×10^{7} (lost) (c) 2×10^{-8} (lost) (d) -8×10^{-12} (lost)

2. The electrostatic force between two point charges kept at a distance d apart, in a medium $\varepsilon_r = 6$ is 0.3 N. The force between them at the same separation in vacuum is
   (a) 20 N (b) 0.5 N (c) 1.8 N (d) 2 N

3. Electic field intensity is 400 V m^{-1} at a distance of 2 m from a point charge. It will be 100 V m^{-1} at a distance?
   (a) 50 cm (b) 4 cm (c) 4 m (d) 1.5 m

4. Two point charges +4q and +q are placed 30 cm apart. At what point on the line joining them the electric field is zero?
   (a) 15 cm from the charge q (b) 7.5 cm from the charge q
   (c) 20 cm from the charge 4q (d) 5 cm from the charge q

www.Padasalai.Net

5. A dipole is placed in a uniform electric field with its axis parallel to the field. It experiences
   (a) only a net force (b) only a torque
   (c) both a net force and torque (d) neither a net force nor a torque

6. If a point lies at a distance x from the midpoint of the dipole, the electric potential at this point is proportional to
   (a) $1/x^2$ (b) $1/x^3$ (c) $1/x^4$ (d) $1/x^{3/2}$

7. Four charges +q, +q, −q and −q respectively are placed at the corners A, B, C and D of a square of side a. The electric potential at the centre O of the square is
   (a) $q/4\pi\varepsilon_0 a$ (b) $2q/4\pi\varepsilon_0 a$ (c) $4q/4\pi\varepsilon_0 a$ (d) zero

http://www.trbtnpsc.com/2013/07/latest-12th-study-materials-2013.html

Unit- 1 Electrostatics one mark questions

8. Electric potential energy (U) of two point charges is
(a) $q_1q_2/4\pi\varepsilon_0 r^2$ (b) $q_1q_2/4\pi\varepsilon_0 r$ (c) $pE\cos\theta$ (d) $pE\sin\theta$

9. The work done in moving 500 μC charge between two points on equipotential surface is
(a) zero (b) finite positive (c) finite negative (d) infinite

10. Which of the following quantities is scalar?
(a) dipole moment (b) electric force (c) electric field (d) electric potential

11. The unit of permittivity is
(a) $C^2 N^{-1} m^{-2}$ (b) $N m^2 C^{-2}$ (c) $H m^{-1}$ (d) $N C^{-2} m^{-2}$

12. The number of electric lines of force originating from a charge of 1 C is
(a) 1.129×10^{11} (b) 1.6×10^{-19} (c) 6.25×10^{18} (d) 8.85×10^{12}

www.Padasalai.Net

13. The electric field outside the plates of two oppositely charged plane sheets of charge density σ is
(a) $\sigma/2\varepsilon_0$ (b) $-\sigma/2\varepsilon_0$ (c) σ/ε_0 (d) zero

14. The capacitance of a parallel plate capacitor increases from 5 μf to 60 μf when a dielectric is filled between the plates. The dielectric constant of the dielectric is
(a) 65 (b) 55 (c) 12 (d) 10

15. A hollow metal ball carrying an electric charge produces no electric field at points
(a) outside the sphere (b) on its surface (c) inside the sphere
(d) at a distance more than twice

http://www.trbtnpsc.com/2013/07/latest-12th-study-materials-2013.html

2.1 A charge of 60 C passes through an electric lamp in 2 minutes. Then the current in the lamp is

(a) 30 A (b) 1 A (c) 0.5 A (d) 5 A

2.2 The material through which electric charge can flow easily is

(a) quartz (b) mica (c) germanium (d) copper

2.3 The current flowing in a conductor is proportional to

(a) drift velocity (b) 1/ area of cross section

(c) 1/no of electrons (d) square of area of cross section.

2.4 A toaster operating at 240V has a resistance of 120Ω. The power is

(a) 400 W (b) 2 W (c) 480 W (d) 240 W

2.5 If the length of a copper wire has a certain resistance R, then on doubling the length its specific resistance

(a) will be doubled (b) will become $1/4^{th}$

(c) will become 4 times (d) will remain the same.

2.6 When two 2Ω resistances are in parallel, the effective resistance is

(a) 2 Ω (b) 4 Ω (c) 1 Ω (d) 0.5 Ω

2.7 In the case of insulators, as the temperature decreases, resistivity

(a) decreases (b) increases

(c) remains constant (d) becomes zero

2.8 If the resistance of a coil is 2 Ω at 0^oc and α = 0.004 /^oC, then its resistance at 100° C is

(a) 1.4 Ω (b) 0 Ω (c) 4 Ω (d) 2.8 Ω

2.9 According to Faraday's law of electrolysis, when a current is passed, the mass of ions deposited at the cathode is independent of

(a) current (b) charge (c) time (d) resistance

2.10 When n resistors of equal resistances (R) are connected in series, the effective resistance is

(a) n/R (b) R/n (c) 1/nR (d) nR

www.Padasalai.Net

3.1 Joule's law of heating is

(a) $H = \frac{I^2}{R} t$ (b) $H = V^2 Rt$

(c) $H = VIt$ (d) $H = IR^2t$

3.2 Nichrome wire is used as the heating element because it has

(a) low specific resistance (b) low melting point

(c) high specific resistance (d) high conductivity

3.3 Peltier coefficient at a junction of a thermocouple depends on

(a) the current in the thermocouple

(b) the time for which current flows

(c) the temperature of the junction

(d) the charge that passes through the thermocouple

3.4 In a thermocouple, the temperature of the cold junction is 20^oC, the neutral temperature is 270^oC. The temperature of inversion is

(a) 520^oC (b) 540^oC

(c) 500^oC (d) 510^oC

www.Padasalai.Net

3.5 Which of the following equations represents Biot-savart law?

(a) $dB = \frac{\mu_o}{4\pi} \frac{Idl}{r^2}$ (b) $\vec{dB} = \frac{\mu_o}{4\pi} \frac{Idl \sin\theta}{r^2}$

(c) $\vec{dB} = \frac{\mu_o}{4\pi} \frac{\overline{Idl} \times \vec{r}}{r^2}$ (d) $\vec{dB} = \frac{\mu_o}{4\pi} \frac{\overline{Idl} \times \vec{r}}{r^3}$

3.6 Magnetic induction due to an infinitely long straight conductor placed in a medium of permeability μ is

(a) $\frac{\mu_o I}{4\pi a}$ (b) $\frac{\mu_o I}{2\pi a}$ (c) $\frac{\mu I}{4\pi a}$ (d) $\frac{\mu I}{2\pi a}$

3.7 In a tangent galvanometer, for a constant current, the deflection is 30°. The plane of the coil is rotated through 90^0. Now, for the same current, the deflection will be

(a) 30^0 (b) 60^0 (c) 90^0 (d) 0^0

3.8 The period of revolution of a charged particle inside a cyclotron does not depend on

(a) the magnetic induction (b) the charge of the particle

(c) the velocity of the particle (d) the mass of the particle

3.9 The torque on a rectangular coil placed in a uniform magnetic field is large, when

(a) the number of turns is large

(b) the number of turns is less

(c) the plane of the coil is perpendicular to the field

(d) the area of the coil is small

3.10 Phosphor – bronze wire is used for suspension in a moving coil galvanometer, because it has

(a) high conductivity (b) high resistivity

(c) large couple per unit twist (d) small couple per unit twist

3.11 Of the following devices, which has small resistance?

(a) moving coil galvanometer (b) ammeter of range 0 – 1A

(c) ammeter of range 0–10 A (d) voltmeter

www.Padasalai.Net

3.12 A galvanometer of resistance G Ω is shunted with S Ω .The effective resistance of the combination is R_a. Then, which of the following statements is true?

(a) G is less than S

(b) S is less than R_a but greater than G.

(c) R_a is less than both G and S

(d) S is less than both G and R_a

3.13 An ideal voltmeter has

(a) zero resistance

(b) finite resistance less than G but greater than Zero

(c) resistance greater than G but less than infinity

(d) infinite resistance

+2 Physics Minimum Learning Material

Unit - 4: Electromagnetic Induction and Alternating Current

1. Electromagnetic induction is not used in
   (a) transformer (b) room heater (c) AC generator (d) choke coil
2. A coil of area of cross section 0.5 m^2 with10 turns is in a plane which I spendendicular to an uniform magnetic field of 0.2 Wb/m^2.The flux though the coil is
   (a) 100 Wb (b) 10 Wb (c) 1 Wb (d) zero
3. Lenz's law is in accordance with the law of
   (a) conservation of charges (b) conservation of flux
   (c) conservation of momentum (d) conservation of energy
4. The self-inductance of a straight conductor is
   (a) zero (b) infinity (c) very large (d) very small
5. The unit henry can also be written as
   (a) $Vs\,A^{-1}$ (b) $Wb\,A^{-1}$ (c) $\Omega\,s$ (d) all
6. An emf of 12 V is induced when the current in the coil changes at the rate of 40A S^{-1}. The coefficient of self induction of the coil is
   (a) 0.3 H (b) 0.003 H (c) 30 H (d) 4.8 H
7. A DC of 5A produces the same heating effect as an AC of
   (a) 50 A rms current (b) 5 A peak current (c) 5A rms current (d) none of these
8. Transformer works on
   (a) AC only (b) DC only (c) both AC and DC (d) AC more effectively than DC
9. The part of the AC generator that passes the current from the coil to the external circuit is
   (a) field magnet (b) split rings (c) slip rings (d) brushes
10. In an AC circuit the applied emf $e = E_0 \sin(\omega t + \pi/2)$ leads the current $I = I_0 \sin(\omega t - \pi/2)$ by
    (a) $\pi/2$ (b) $\pi/4$ (c) π (d) 0
11. Which of the following cannot be stepped up in a transformer?
    (a) input current (b) input voltage (c) input power (d) all
12. The power loss is less in transmission lines when
    (a) voltage is less but current is more (b) both voltage and current are more
    (c) voltage is more but current is less (d) both voltage and current are less
13. Which of the following devices does not allow d.c. to pass through?
    (a) resistor (b) capacitor (c) inductor (d) all the above
14. In an ac circuit
    (a) the average value of current is zero (b) the average value of square of current is zero.
    (c) the average power dissipation is zero. (d) the rms current is $\sqrt{2}$ time of peak current.

www.Padasalai.Net

http://www.trbtnpsc.com/2013/07/latest-12th-study-materials-2013.html

Unit: 5 Electromagnetic Waves and Wave optics

One mark questions

01. In an electromagnetic wave
(a) power is equally transferred along the electric and magnetic fields
(b) power is transmitted in a direction perpendicular to both the fields
(c) power is transmitted along electric field
(d) power is transmitted along magnetic field

02. Electromagnetic waves are
(a) transverse (b) longitudinal
(c) may be longitudinal or transverse (d) neither longitudinal nor transverse

03. Refractive index of glass is 1.5. Time taken for light to pass through a glass plate of thickness 10 cm is
(a) 2×10^{-8} s (b) 2×10^{-10} s (c) 5×10^{-8} s (d) 5×10^{-10} s

04. In an electromagnetic wave the phase difference between electric field E and magneticfield B is
(a) $\pi/4$ (b) $\pi/2$ (c) π (d) zero

www.Padasalai.Net

05. Atomic spectrum should be
(a) pure line spectrum (b) emission band spectrum
(c) absorption line spectrum (d) absorption band spectrum.

06. When a drop of water is introduced between the glass plate and plano convex lens in Newton's rings system, the ring system
(a) contracts (b) expands (c) remains same (d) first expands, then contracts

07. A beam of monochromatic light enters from vacuum into a medium of refractive index μ. The ratio of the wavelengths of the incident and refracted waves is
(a) $\mu : 1$ (b) $1 : \mu$ (c) $\mu^2 : 1$ (d) $1 : \mu^2$

08. If the wavelength of the light is reduced to one fourth, then the amount of scattering is
(a) increased by 16 times (b) decreased by 16 times
(c) increased by 256 times (d) decreased by 256 times

http://www.trbtnpsc.com/2013/07/latest-12th-study-materials-2013.html

Unit - 5 One mark questions Page - 2

09. In Newton's ring experiment the radii of the mth and (m + 4)th dark rings are respectively 5 mm and 7 mm. What is the value of m?

(a) 2 (b) 4 (c) 8 (d) 10

10. The path difference between two monochromatic light waves of wavelength 4000 Å is 2×10^{-7} m. The phase difference between them is

(a) π (b) 2π (c) 32π (d) π/2

11. In Young's experiment, the third bright band for wavelength of light 6000 Å coincides with the fourth bright band for another source in the same arrangement. The wave length of the another source is

(a) 4500 Å (b) 6000 Å (c) 5000 Å (d) 4000 Å

12. A light of wavelength 6000 Å is incident normally on a grating 0.005 m wide with 2500 lines. Then the maximum order is

(a) 3 (b) 2 (c) 1 (d) 4

www.Padasalai.Net

13. A diffraction pattern is obtained using a beam of red light. What happens if red light is replaced by blue light?

(a) bands disappear

(b) no change

(c) diffraction pattern becomes narrower and crowded together

(d) diffraction pattern becomes broader and farther apart

14. The refractive index of the medium, for the polarising angle 60o is

(a) 1.732 (b) 1.414 (c) 1.5 (d) 1.468

http://www.trbtnpsc.com/2013/07/latest-12th-study-materials-2013.html

Unit - 6 Atomic Physics

One mark questions

1. The cathode rays are
   (a) a stream of electrons (b) a stream of positive ions
   (c) a stream of uncharged particles (d) the same as canal rays

2. A narrow electron beam passes undeviated through an electric field $E = 3 \times 10^4$ V/m and an overlapping magnetic field $B = 2\times10^{-3}$ Wb/m². The electron motion, electric field and magnetic field are mutually perpendicular. The speed of the electron is
   (a) 60 ms^{-1} (b) 10.3×10^7 ms^{-1} (c) 1.5×10^7 ms^{-1} (d) 0.67×10^{-7} ms^{-1}

3. According to Bohr's postulates, which of the following quantities take discrete values?
   (a) kinetic energy (b) potential energy (c) angular momentum (d) momentum

4. The ratio of the radii of the first three Bohr orbit is,
   (a) 1 : 1/2 : 1/3 (b) 1 : 2 : 3 (c) 1 : 4 : 9 (d) 1 : 8 : 27

www.Padasalai.Net

5. The first excitation potential energy or the minimum energy required to excite the atom from ground state of hydrogen atom is,
   (a) 13.6 eV (b) 10.2eV (c) 3.4 eV (d) 1.89 eV

6. According to Rutherford atom model, the spectral lines emitted by an atom is,
   (a) line spectrum (b) continuous spectrum
   (c) continuous absorption specturm (d) band spectrum

7. Energy levels A, B, C of a certain atom correspond to increasing values of energy (i.e.,) $E_A < E_B < E_C$. If $\lambda1$, $\lambda2$, $\lambda3$ are the wavelengths of radiations corresponding to The transitions C to B, B to A and C to A respectively, which of the following statements is correct.
   (a) $\lambda_3 = \lambda_1 + \lambda_2$ (b) $\lambda_3 = \lambda_1\lambda_2/\lambda_1+\lambda_2$ (c) $\lambda_1 = \lambda_2 + \lambda_3 = 0$ (d) $\lambda^2_3 = \lambda^2_1 + \lambda^2_2$

8. The elliptical orbits of electron in the atom were proposed by
   (a) J.J.Thomson (b) Bohr (c) Sommerfeld (d) de Broglie

http://www.trbtnpsc.com/2013/07/latest-12th-study-materials-2013.html

9. X−ray is
(a) phenomenon of conversion of kinetic energy into radiation.
(b) conversion of momentum
(c) conversion of energy into mass
(d) principle of conservation of charge

10. In an X-ray tube, the intensity of the emitted X−ray beam is increased by
(a) increasing the filament current (b) decreasing the filament current
(c) increasing the target potential (d) decreasing the target potential

11. The energy of a photon of characteristic X-ray from a Coolidge tube comes from
(a) the kinetic energy of the free electrons of the target
(b) the kinetic energy of ions of the target
(c) the kinetic energy of the striking electron
(d) an atomic transition in the target.

12. A Coolidg e tube operates at 24800 V. The maximum frequency of Xradiation emitted from Coolidge tube is
(a) 6×10^{18} Hz (b) 3×10^{18} Hz (c) 6×10^{8} Hz (d) 3×10^{8} Hz

13. In hydrogen atom, which of the following transitions produce a spectral line of maximum wavelengt
(a) 2 --> 1 (b) 4 --> 1 (c) 6 --> 5 (d) 5 -->2

www.Padasalai.Net

14. In hydrogen atom, which of the following transitions produce a spectral line of maximum frequency
(a) 2 --> 1 (b) 6 --> 2 (c) 4 --> 3 (d) 5 -->2

15. After pumping process in laser,
(a) the number of atoms in the ground state is greater than the number of atoms in the excited state.
(b) the number of atoms in the excited state is greater than the number of atoms in the ground state.
(c) the number of atoms in the ground state is equal to the number atoms in the excited state.
(d) No atoms are available in the excited state.

16. The chromium ions doped in the ruby rod
(a) absorbs red light (b) absorbs green light
(c) absorbs blue light (d) emits green light

http://www.trbtnpsc.com/2013/07/latest-12th-study-materials-2013.html

www.Padasalai.Net www.TrbTnpsc.com

7.1 A photon of frequency ν is incident on a metal surface of threshold frequency ν_o. The kinetic energy of the emitted photoelectron is

(a) $h(\nu - \nu_o)$ (b) $h\nu$ (c) $h\nu_o$ (d) $h(\nu + \nu_o)$

7.2 The work function of a photoelectric material is 3.3 eV. The threshold frequency will be equal to

(a) 8×10^{14} Hz (b) 8×10^{10} Hz (c) 5×10^{20} Hz (d) 4×10^{14} Hz.

7.3 The stopping potential of a metal surface is independent of

(a) frequency of incident radiation (b) intensity of incident radiation

(c) the nature of the metal surface (d) velocity of the electrons emitted.

7.4 At the threshold frequency, the velocity of the electrons is

(a) zero (b) maximum (c) minimum (d) infinite

7.5 The photoelectric effect can be explained on the basis of

(a) corpuscular theory of light (b) wave theory of light

(c) electromagnetic theory of light (d) quantum theory of light

7.6 The wavelength of the matter wave is independent of

(a) mass (b) velocity (c) momentum (d) charge

7.7 If the kinetic energy of the moving particle is E, then the de Broglie wavelength is.

(a) $\lambda = \frac{h}{\sqrt{2mE}}$ (b) $\lambda = \frac{\sqrt{2mE}}{h}$

(c) $\lambda = h\sqrt{2mE}$ (d) $\lambda = \frac{h}{E\sqrt{2m}}$

www.Padasalai.Net

7.8 The momentum of the electron having wavelength 2Å is

(a) 3.3×10^{24} kg m s^{-1} (b) 6.6×10^{24} kg m s^{-1}

(c) 3.3×10^{-24} kg m s^{-1} (d) 6.6×10^{-24} kg m s^{-1}

7.9 According to relativity, the length of a rod in motion

(a) is same as its rest length

(b) is more than its rest length

(c) is less than its rest length

(d) may be more or less than or equal to rest length depending on the speed of the rod

7.10 If 1 kg of a substance is fully converted into energy, then the energy produced is

(a) 9×10^{16} J (b) 9×10^{24} J (c) 1 J (d) 3×10^{8} J

http://www.trbtnpsc.com/2013/07/latest-12th-study-materials-2013.html

Unit - 8 Nuclear Physics

One mark questions

1. The nuclear radius of $_4Be^8$ nucleus is
   (a) 1.3×10^{-15} m (b) 2.6×10^{-15} m (c) 1.3×10^{-13} m (d) 2.6×10^{-13} m

2. The nuclei $_{13}Al^{27}$ and $_{14}Si^{28}$ are example of
   (a) isotopes (b) isobars (c) isotones (d) isomers

3. The mass defect of a certain nucleus is found to be 0.03 amu. Its binding energy is
   (a) 27.93 eV (b) 27.93 KeV (c) 27.93 MeV (d) 27.93 GeV

4. Nuclear fission can be explained by
   (a) shell model (b) liquid drop model (c) quark model (d) Bohr atom model

5. The nucleons in a nucleus are attracted by
   (a) gravitational force (b) electrostatic force (c) nuclear force (d) magnetic force

www.Padasalai.Net

6. The ionisation power is maximum for
   (a) neutrons (b) α – particles (c) γ – rays (d) β – particles

7. The half life period of a certain radioactive element with disintegration constant 0.0693 per day is
   (a) 10 days (b) 14 days (c) 140 days (d) 1.4 days

8. The radio-isotope used in agriculture is
   (a) $_{15}P^{31}$ (b) $_{15}P^{32}$ (c) $_{11}Na^{23}$ (d) $_{11}Na^{24}$

http://www.trbtnpsc.com/2013/07/latest-12th-study-materials-2013.html

9. The average energy released per fission is
(a) 200 eV (b) 200 MeV (c) 200 meV (d) 200 GeV

10. The explosion of atom bomb is based on the principle of
(a) uncontrolled fission reaction (b) controlled fission reaction
(c) fusion reaction (d) thermonuclear reaction

11. Anaemia can be diagnosed by
(a) $_{15}P^{31}$ (b) $_{15}P^{32}$ (c) $_{26}Fe^{59}$ (d) $_{11}Na^{24}$

12. In the nuclear reaction $_{80}Hg^{198} + X \rightarrow {}_{79}Au^{198} + {}_{1}H^{1}$, X-stands for
(a) proton (b) electron (c) neutron (d) deutron

13. In β – decay
(a) atomic number decreases by one (b) mass number decreases by one
(c) proton number remains the same (d) neutron number decreases by one

14. Isotopes have
(a) same mass number but different atomic number
(b) same proton number and neutron number
(c) same proton number but different neutron number
(d) same neutron number but different proton number

www.PadaSalai.Net

15. The time taken by the radioactive element to reduce to 1/e times is
(a) half life (b) mean life (c) half life/2 (d) twice the mean life

16. The half life period of N^{13} is 10.1 minute. Its life time is
(a) 5.05 minutes (b) 20.2 minutes (c) 1/0.6931 minutes (d) infinity

17. Positive rays of the same element produce two different traces in a Bainbridge mass spectrometer. The positive ions have
(a) same mass with different velocity (b) same mass with same velocity
(c) different mass with same velocity (d) different mass with different velocity

18. The binding energy of 26Fe56 nucleus is
(a) 8.8 MeV (b) 88 MeV (c) 493 MeV (d) 41.3 MeV

19. The ratio of nuclear density to the density of mercury is about
(a) 1.3×10^{10} (b) 1.3 (c) 1.3×10^{13} (d) 1.3×10^{4}

http://www.trbtnpsc.com/2013/07/latest-12th-study-materials-2013.html

www.Padasalai.Net www.TrbTnpsc.com

9.1 The electrons in the atom of an element which determine its chemical and electrical properties are called

(a) valence electrons (b) revolving electrons
(c) excess electrons (d) active electrons

9.2 In an N–type semiconductor, there are

(a) immobile negative ions (b) no minority carriers
(c) immobile positive ions (d) holes as majority carriers

9.3 The reverse saturation current in a PN junction diode is only due to

(a) majority carriers (b) minority carriers
(c) acceptor ions (d) donor ions

9.4 In the forward bias characteristic curve, a diode appears as

(a) a high resistance (b) a capacitor
(c) an OFF switch (d) an ON switch

9.5 Avalanche breakdown is primarily dependent on the phenomenon of

(a) collision (b) ionisation
(c) doping (d) recombination

www.Padasalai.Net

9.6 The colour of light emitted by a LED depends on

(a) its reverse bias (b) the amount of forward current
(c) its forward bias (d) type of semiconductor material

9.7 The emitter base junction of a given transistor is forward biased and its collector–base junction is reverse biased. If the base current is increased, then its

(a) V_{CE} will increase (b) I_C will decrease
(c) I_C will increase (d) V_{CC} will increase.

9.8 Improper biasing of a transistor circuit produces

(a) heavy loading of emitter current
(b) distortion in the output signal
(c) excessive heat at collector terminal
(d) faulty location of load line

http://www.trbtnpsc.com/2013/07/latest-12th-study-materials-2013.html

www.Padasalai.Net www.TrbTnpsc.com

9.9 An oscillator is

(a) an amplifier with feedback

(b) a convertor of ac to dc energy

(c) nothing but an amplifier

(d) an amplifier without feedback

9.10 In a Colpitt's oscillator circuit

(a) capacitive feedback is used

(b) tapped coil is used

(c) no tuned LC circuit is used

(d) no capacitor is used

9.11 Since the input impedance of an ideal operational amplifier is infinite,

(a) its input current is zero

(b) its output resistance is high

(c) its output voltage becomes independent of load resistance

(d) it becomes a current controlled device

www.Padasalai.Net

9.12 The following arrangement performs the logic function of _____ gate

(a) AND (b) OR

(c) NAND (d) EXOR

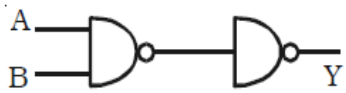

9.13 If the output (Y) of the following circuit is 1, the inputs A B C must be

(a) 0 1 0 (b) 1 0 0

(c) 1 0 1 (d) 1 1 0

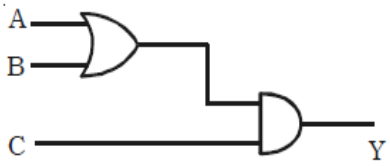

9.14 According to the laws of Boolean algebra, the expression (A + AB) is equal to

(a) A (b) AB (c) B (d) $\overline{A}$

9.15 The Boolean expression $\overline{ABC}$ can be simplified as

(a) $AB + \overline{C}$ (b) $\overline{A} \cdot \overline{B} \cdot \overline{C}$ (c) $AB + BC + CA$ (d) $\overline{A} + \overline{B} + \overline{C}$

http://www.trbtnpsc.com/2013/07/latest-12th-study-materials-2013.html

www.Padasalai.Net www.TrbTnpsc.com

10.1 High frequency waves follow

(a) the ground wave propagation (b) the line of sight direction

(c) ionospheric propagation (d) the curvature of the earth

10.2 The main purpose of modulation is to

(a) combine two waves of different frequencies

(b) acquire wave shaping of the carrier wave

(c) transmit low frequency information over long distances efficiently

(d) produce side bands

10.3 In amplitude modulation

(a) the amplitude of the carrier wave varies in accordance with the amplitude of the modulating signal.

(b) the amplitude of the carrier wave remains constant

(c) the amplitude of the carrier varies in accordance with the frequency of the modulating signal

(d) modulating frequency lies in the audio range

10.4 In amplitude modulation, the band width is

(a) equal to the signal frequency (b) twice the signal frequency

(c) thrice the signal frequency (d) four times the signal frequency

10.5 In phase modulation

(a) only the phase of the carrier wave varies

(b) only the frequency of the carrier wave varies.

(c) both the phase and the frequency of the carrier wave varies.

(d) there is no change in the frequency and phase of the carrier wave

10.6 The RF channel in a radio transmitter produces

(a) audio signals

(b) high frequency carrier waves

(c) both audio signal and high frequency carrier waves

(d) low frequency carrier waves.

10.7 The purpose of dividing each frame into two fields so as to transmit 50 views of the picture per second is

(a) to avoid flicker in the picture

(b) the fact that handling of higher frequencies is easier

(c) that 50 Hz is the power line frequency in India

(d) to avoid unwanted noises in the signals

10.8 Printed documents to be transmitted by fax are converted into electrical signals by the process of

(a) reflection (b) scanning (c) modulation (d) light variation

www.Padasalai.Net

http://www.trbtnpsc.com/2013/07/latest-12th-study-materials-2013.html

+2 Physics

Unit:2. CURRENT ELECTRICITY

Minimum Learning Material- Three Marks

1. Define Drift Velocity.Give its unit. (M – 07,O – 08,J – 09 ,O – 09, M – 10,O – 10 ,M – 11,O – 11, J – 13,J - 15)

It is the velocity with which free electrons get drifted towards the positive terminal, when an electric field is applied.

Its unit is m/s

2. Define Mobility and give its unit. (O – 06 , M – 08, M – 09, O – 15, M – 16)

It is the drift velocity acquired per unit electric field. It takes the unit $m^2V^{-1}s^{-1}$.

3. State Ohm's Law. (M – 06 , O – 07, O – 09, M – 10,J – 12, O – 12, M – 13, O – 14, J - 16)

At a constant temperature, the steady current flowing through a conductor is directly proportional to the potential difference between the two ends of the conductor.

(i.e) V = IR

4. State the three applications of superconductors? (J – 07,O – 07 , J – 06 ,O – 06, O – 07 , J – 13, M - 15)

1. Superconductors form the basis of energy saving power system, namely the superconducting generators, which are smaller in size and weight.
2. Superconducting magnets have been used to levitate train above its rails. They can be driven at high speed with minimal expenditure of energy.
3. Superconducting magnetic propulsion systems may be used to launch satellites into orbits directly from the earth without the use of rockets.

www.Padasalai.Net

5. State Kirchoff's first law (Current law). (J – 06 , M – 08, J – 11, O – 15)

The algebraic sum of the currents meeting at any junction in a circuit is zero.

This law is a consequence of conservation of charges.

6. State Kirchoff's second law (voltage law).(M – 07, J – 06, M – 08, M – 09, J – 11, M – 12,M – 14,M – 15)

The algebraic sum of the products of resistance and current in each part of any closed circuit is equal to the algebraic sum of the emf's in that closed circuit.

This law is a consequence of conservation of energy.

http://www.trbtnpsc.com/2013/07/latest-12th-study-materials-2013.html

Unit-2 Three marks MLM

7. Compare the emf and the potential difference. (J – 07, O – 08, J – 11, J – 12, M – 13, M - 15)

Comparison of emf and potential difference

1. The difference of potentials between the two terminals of a cell in an open circuit is called the electromotive force (emf) of a cell.

   The difference in potentials between any two points in a closed circuit is called potential difference.

2. The emf is independent of external resistance of the circuit, whereas potential difference is proportional to the resistance between any two points.

8. State Faraday's laws of electrolysis. (M – 06, J – 06, J – 10,O -10, J – 13, J – 15)

First Law : The mass of a substance liberated at an electrode is directly proportional to the charge passing through the electrolyte.

Second Law : The mass of a substance liberated at an electrode by a given amount of charge is proportional to the chemical equivalent of the substance.

www.Padasalai.Net

9. The resistance of a nichrome wire at 0°C is 10 Ω. If the temperature coefficient of resistance is 0.004 / °C, find its resistance at boiling point of water. Comment on the result. (J – 07, O – 07, M – 08, J – 09, O-10, O -11, O – 12, O – 13, J - 15)

Resistance at boiling point of water $R_t = R_o (1+ \alpha t)$

$= 10 (1 + (0.004 \times 100))$

$R_t = 14\ \Omega$.

Result : The resistance increases with the temperature.

10. Define: the temperature coefficient of resistance. (J – 08, M – 11, J – 14, M – 16)

The ratio of increase in resistance per degree rise in temperature to its resistance at 0° C is called as temperature coefficient of resistance . Its unit is per °C.

11. Give any three uses of secondary cells. (O – 08, O – 11, M – 12)

i) The secondary cells are rechargeable.

ii) They have very low internal resistance.

iii) They can deliver a high current if required.

iv) They are used in all automobiles like cars, two wheelers, trucks etc.

http://www.trbtnpsc.com/2013/07/latest-12th-study-materials-2013.html

Unit-2 Three marks MLM

12. Distinguish between electric power and electric energy. (J – 08, J – 09, O – 13, J – 14, O – 14)

Electric power

i) Electric power is defined as the rate of doing electric work.

ii) Electric power is the product of potential difference and current strength.

iii) Unit: watt

Electric energy

1) Electric energy is defined as the capacity to do work.

2) Its unit is joule.

13. A manganin wire of length 2m has a diameter of 0.4 mm with a resistance of 70 ohm. Find its resistivity. (J – 06, M – 13)

$\rho = (P \times \pi r^2) / L = (70 \times 22 \times 2 \times 10^{-4} \times 2 \times 10^{-4}) / 7 \times 2$

$= 44 \times 10^{-7} = 4.4 \times 10^{-6}\ \Omega m = 4.4\ \mu\ \Omega m.$

www.Padasalai.Net

14. In the given circuit, calculate the current through the circuit and mention its direction. (M – 06, O – 14)

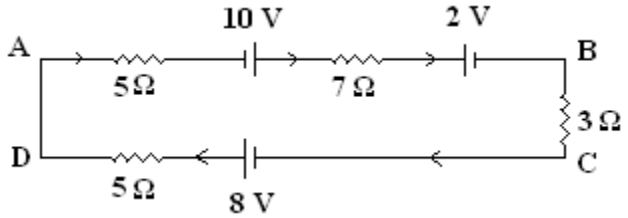

Let the current be I.

$7I + 3I + 5I + 5I = 10 + 8 - 2$

(i.e) $20I = 16 \quad \therefore \quad I = 0.8\ A$

Current flows along the path ABCD.

15. What are the changes that occur at the superconducting transition temperature? (J – 10 , M – 14)

At the transition temperature the following changes are observed :

(i) The electrical resistivity drops to zero.

(ii) The conductivity becomes infinity

(iii) The magnetic flux lines are excluded from the material.

***** **BEST WISHES** *****

http://www.trbtnpsc.com/2013/07/latest-12th-study-materials-2013.html

+2 Physics

Unit: 9 Semiconductor devices and their applications

Minimum Learning Material- Three Marks

1. State the advantages of IC over the discrete components.

(M – 06, O – 06, J – 10, J -11, M – 14, M – 16)

(i) Extremely small in size.
(ii) Low power consumption
(iii) Reliability
(iv) Reduced cost
(v) Very small weight
(vi) Easy replacement

2. Define input impedance. (J – 06, J – 11)

The input impedance of the transistor is defined as the ratio of small change in base-emitter voltage to the corresponding change in base current at a given V_{CE}.

Input impedance, $r_i = (\Delta V_{BE} / \Delta I_B)_{VCE}$ The unit of input impedance is ohm.

3. Define output impedance. (O – 08, O –09)

The output impedance r_o is defined as the ratio of variation in the collector emitter voltage to the corresponding variation in the collector current at a constant base current.

Output impedance, $r_0 = (\Delta V_{CE} / \Delta I_C)_{IB}$ The unit of output impedance is ohm.

www.Padasalai.Net

4. When the negative feedback is applied to an amplifier of gain 50, the gain falls to 25. Calculate the feedback ratio. (J – 06, O – 09, M – 10 , O – 10, J – 14, M – 16)

$$Af = A / 1 + A\beta$$
$$25 = 50 / 1 + 50\beta$$
$$1 = 2 / 1 + 50\beta$$
$$1 + 50\beta = 2 \text{ (i.e) } 50\beta = 1$$
$$B = 1/50 = 0.02$$

5. What is an extrinsic semiconductor? (J – 06, J – 08, O – 10, M – 11, J – 13, J – 14)

An extrinsic semiconductor is one in which an impurity with a valency higher or lower than the valency of the pure semiconductor is added, so as to increase the electrical conductivity of the semiconductor.

http://www.trbtnpsc.com/2013/07/latest-12th-study-materials-2013.html

Unit - 9 Three marks MLM

6. Define rectification and rectifier. (M – 07, M – 09, O – 14)

The process in which alternating voltage or alternating current is converted into direct voltage or direct current is known as rectification. The device used for this process is called as rectifier.

7. Define Zener breakdown. (O – 06, J – 07, M – 08, M – 12, J – 12, J – 13, J – 16)

Zener diode is a reverse biased, heavily doped semiconductor (silicon or germanium) PN junction diode, which is operated exclusively in the breakdown region.

As the reverse voltage applied to the PN junction is increased, at a particular voltage, the current increases enormously from its normal cut off value. This voltage is called Zener voltage or breakdown voltage (v_z).

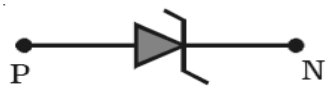

8. What are the advantages of negative feedback? (J – 07, J – 08, O – 07, M -11,M -12, M – 13)

i) Highly stabilized gain
ii) Reduction in the noise level
iii) Increased bandwidth.
iv) Increased input impedance and decreased output impedance
v) Less distortion

www.Padasalai.Net

9. State Demorgans theorems. (M – 08, M – 09, J -10, M – 12, M – 13, M – 15)

FIRST THEOREM:

The complement of the sum is equal to the product of the complements.

SECOND THEOREM:

The complement of the product is equal to the sum of the complements.

10. What is an integrated circuit? (J – 08, J – 09, O – 12, O – 14)

An integrated circuit consists of single-crystal chip of silicon containing both active and passive elements and inters connections.

http://www.trbtnpsc.com/2013/07/latest-12th-study-materials-2013.html

Unit - 9 Three marks MLM

11. Give the Barkhausen criteria for oscillations. (O – 07, O – 08, J – 09, M – 10, O – 15, J – 16)

The essential conditions for the maintenance of oscillation:

(i) The loop gain Aβ =1 and

(ii) the net phase shift round the loop is 0° or integral multiples of 2π.

12. The voltage gain of an amplifier without feedback is 100. If negative feedback is applied with feedback fraction 0.1, calculate the voltage gain with feedback. (O – 06, O - 11)

$$A_F = A / 1 + A\beta$$
$$= 100 / 1 + 100 \times 1/10$$
$$= 100 / 11 = 9.09$$

13. Find the output of the following logic circuit. (O – 08, M -09)

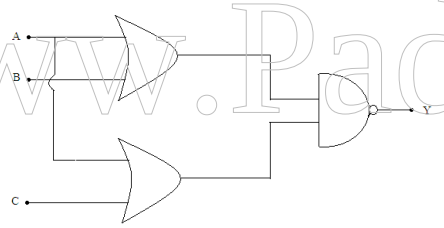

$$Y = \overline{(A + B)(A + C)}$$
$$Y = \overline{(A+B)} + \overline{(A+C)}$$
$$= \overline{A.B} + \overline{A.C}$$
$$Y = \overline{A(BC)}$$

www.Padasalai.Net

14. Give the circuit diagram of NOT gate using a transistor. (J – 10, O – 11, O – 13, J – 15)

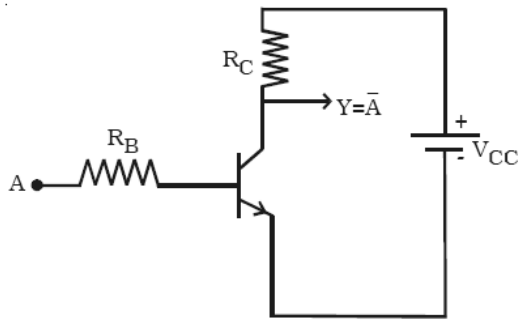

http://www.trbtnpsc.com/2013/07/latest-12th-study-materials-2013.html

Unit - 9 Three marks MLM

15. What are universal gates? Why are they called so? (J – 12, J – 13, M – 16)

NAND and NOR gates are called universal gates because they can perform all the three basic logic functions i.e. the functions of OR, AND and NOT gates.

16. Draw the circuit for summing amplifier. (M – 09, M – 13, J – 13)

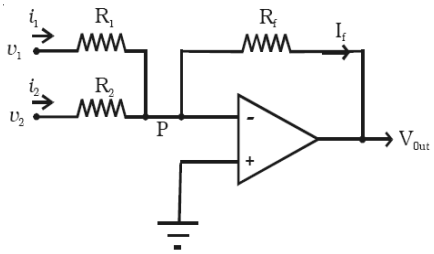

17. Collector current I_c=25mA and base current I_b = 50μA. Find current gain β of a transistor. (J – 10, O – 12, M –13)

$$\beta = I_C / I_B$$

$$= 25 \times 10^{-3} / 50 \times 10^{-6}$$

$$= 500$$

$$\alpha = \beta / (1 + \beta) = 500/501$$

$$= 0.998.$$

www.Padasalai.Net

Best wishes

http://www.trbtnpsc.com/2013/07/latest-12th-study-materials-2013.html

+2 Physics Minimum Learning Material

Unit - 2 Current Electricity

Five marks Questions and Answers

1. Wheatstone's Bridge

(M-06,J-06,O-06,M-08,J-09,M-10)

Applying Kirchoff's current law,

At the junction B, $I_1 - I_g - I_3 = 0$

At the junction D, $I_2 + I_g - I_4 = 0$

In the closed path ABDA, $I_1 P + I_g G - I_2 R = 0$

In the closed path ABCDA, $I_1 P + I_3 Q - I_2 R - I_4 S = 0$

If $I_g = 0$, then, $\frac{P}{Q} = \frac{R}{S}$

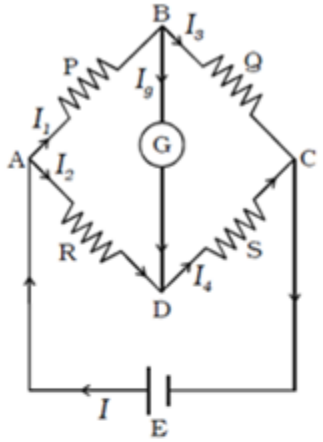

2. Potentiometer

(M-07,O-10,O-11,M-12,M-14)

Emf of the first cell

$E_1 = I r \ell_1$

Emf of the second cell

$E_2 = I r \ell_2$

$\therefore \frac{E_1}{E_2} = \frac{\ell_1}{\ell_2}$

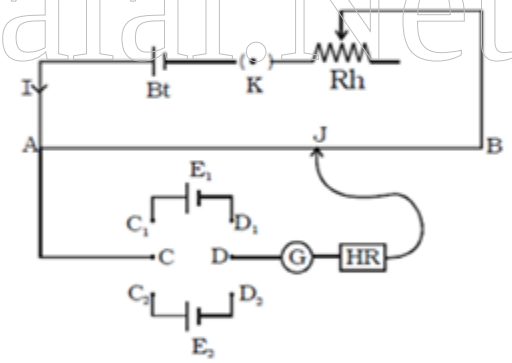

3. Internal resistance of the cell using voltmeter

(J-08,O-09,J-11,M-13,J-13)

In an open circuit, V = IR

In the closed circuit, V = E - Ir

$\therefore$ Internal resistance of the cell $r = \left(\frac{E - V}{V}\right) R$

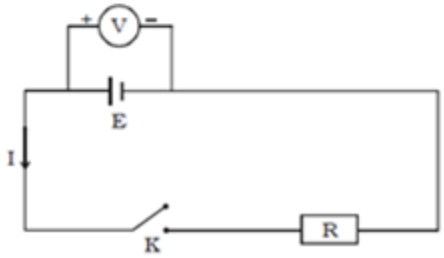

www.Padasalai.Net

http://www.trbtnpsc.com/2013/07/latest-12th-study-materials-2013.html

+2 Physics Minimum Learning Material

Unit - 2 Current Electricity

Page - 2

4. Faraday's second law of electrolysis

(J-06,J-07,M-08,M-11,O-13)

i) Law:

The mass of the substance liberated at an electrode by a given amount of charge is proportional to the chemical equivalent of the sustance.

ii) $$\frac{m_1}{m_2} = \frac{E_1}{E_2}$$

iii) $\therefore m \alpha E$

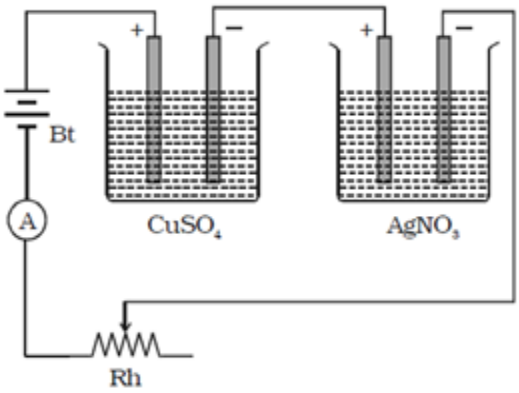

5. Daniel cell

(O-08,J-09,J-10,M-11,M-14)

i) Zinc rod reacts with dilute sulphuric acid. gives Zn^{++} and two electrons.

ii) Zn^{++} ions react with $CuSO_4$ and gives Cu^{++} ions.

iii) Cu^{++} ions gets deposited on the copper vessel.

iv) Current flows from copper to zinc rod.

v) The emf of the cell is 1.08 V

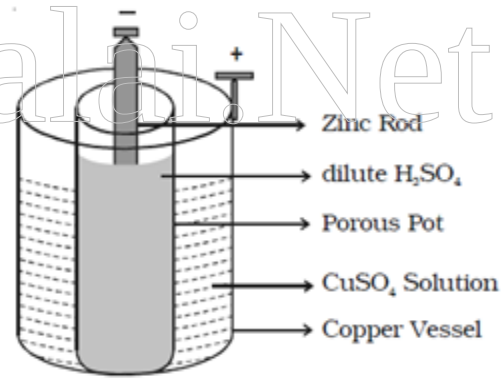

6. Uses of superconductors

(O-08,M-09,J-11,O-12,M-13)

Superconductors are used

i) as superconducting generators.

ii) to levitate the trains

iii) to launch satellites without use of rockets.

iv) as high efficiency ore - separating machines.

v) as memory elements in computers.

v) as transmission lines.

Best Wishes to all +2 Students.

Hard working never fails.

பயின்றதைச் சோதிக்கவே தேர்வு - அதனால் பயின்றவருக்கு ஏற்படாது மனச்சோர்வு.

www.PadasalaiNet

http://www.trbtnpsc.com/2013/07/latest-12th-study-materials-2013.html

Unit - 2 Current Electricity

MLM -- Five marks Questions and Answers

7. Principle of Potentiometer

(O-07, J-14, J-15)

* Circuit connections are given as shown in the diagram.
* No current flows through the galvanometer when the potential difference between A nd J is equal to the emf of the cell.
* If ℓ is the balanching length, the p.d, between A nd J is = $ir\ell$.
* $\therefore E = Ir\ell$ (i.e) $E \propto \ell$

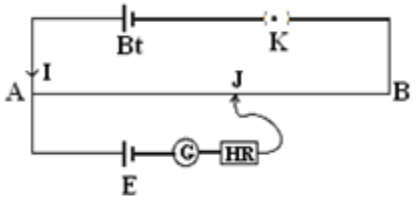

8. Faday's first law of electrolysis

(J-08, O-09, M-16)

First law:

The mass of the substance liberated at an electrode is directly proportional to the charge passing through the electrolyte.

* Circuit connections are made as shown in diagram.
* I_1 . I_2 currents are passed through the eletrolyte for the same time t. m_1 and m_2 are the masses of the substance deposited on the cathode.

$m1/m2 = I1 / I2 \quad \therefore m \propto I$

* Same current I is passed through the eletrolyte for the time t_1, t_2 . m_3 and m_4 are the masses of the substance deposited on the cathode.

$m3/m4 = t1 / t2 \quad \therefore m \propto t$

* $\therefore m \propto It$ (i.e) $m \propto q$

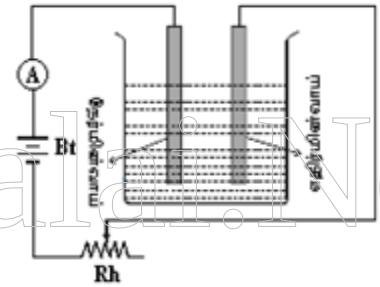

9. Leclanche cell

(J-07, O-12, O-13)

* Porous pot contains carbon rod, manganese dioxide and charcoal pwder.
* Ammonium chloride is the electrolyte. Zinc rod is immersed in that solution.
* Oxidation reaction: Zn atoms are coverted in to Zn^{++} ions and two electrons.
* $Zn^{++} + 2\,NH_4Cl \rightarrow 2NH_3 + ZnCl_2 + 2\,H^+ + 2e^-$
* Hydrogen ions react with MnO_2 and positive charges are transferred to the carbon rod.
* When Carbon and Zinc rods are connected in the external circuit, current flows from carbon to the zinc rod.
* Emf of the cell is 1.5 V and current is 0.25 A.

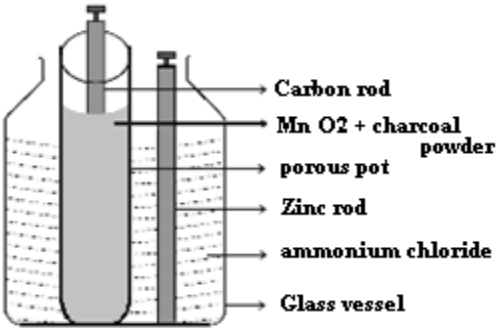

www.Padasalai.Net

http://www.trbtnpsc.com/2013/07/latest-12th-study-materials-2013.html

Unit - 7 Dual Nature of Radiation and Matter and Relativity

1. Uses of photo electric cells (O-06,J-07,M-08,J-08,J-09,M-12,J-11)

Photo electric cells are used

i) reproducing sound in cinematography
ii) in controlling of temperature of furnaces
iii) in automatic switching on and off the street lights
iv) to study the temperature and spectra of stars
v) in fire and burglar alarms
vi) in closing and opening the doors automatically

2. Length contraction (M-06,M-08,M-10,O-10,J-11,J-13)

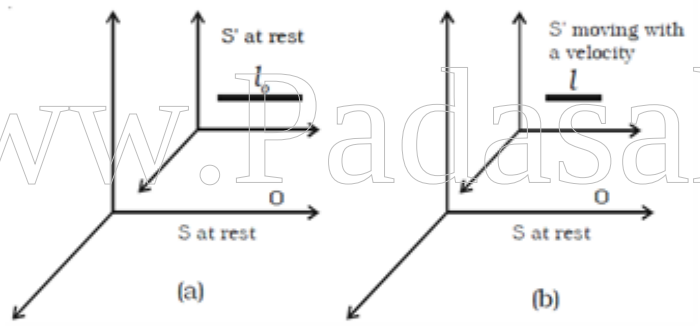

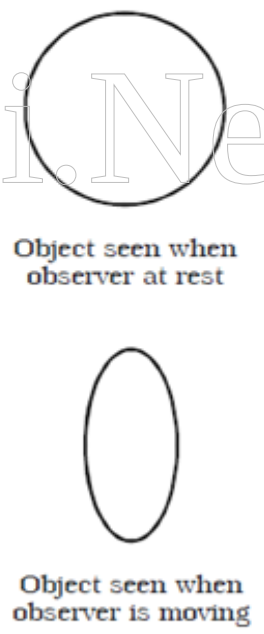

i) Initially the frames S and S' are at rest.

ii) S' move with a velocity v along + X axis.

iii) The length of the rod measured by the observer in S

$$l = l_o \sqrt{1 - \frac{v^2}{c^2}}$$

i.e., $l < l_o$

www.Padasalai.Net

3. Einstein's Photo electric equation

(M-06,J-06,O-09,M-10,J-10,O-11,O-12,M-14)

i) Quantum theory is used.

ii) interaction between a incident photon and an electron in the metal.

iii) Energy required to remove an electron from the metal is Photo electric work function W.

iv) Energy of the incident photon = Work function + Energy of the electron

v) $h\nu = W + \frac{1}{2} mv^2$ Here, $h\nu_o = W$

vi) $h\nu - h\nu_o = \frac{1}{2} mv^2_{max}$

4. de Broglie wavelength (O-06,M-07,M-09,J-10,O-10,J-11,J-12,M-13)

Planck's equation $E = h\gamma$

Einstein's equation $E = mc^2$

$\therefore h\gamma = mc^2$

$\frac{hc}{\lambda} = mc^2 \quad \left(\because \frac{c}{\lambda} = \gamma\right)$

$\lambda = \frac{h}{mc}$

If $c = v$, then $\lambda = \frac{h}{mv} = \frac{h}{p}$ Here p = momentum

5. Laws of photo electric equation (M-07,M-09)

i) The minimum frequency below which emission of photoelectrons stops completely is called threshold frequency.

ii) Photoelectric current is directly proportional to the intensity of the incident radiation.

iii) Photoelectric emission is an instantaneous process.

iv) The maximum kinetic energy of the electron is proportional to the frequency of the incident radiation.

www.Padasalai.Net

6. Time dilation (J-06, J-08, O-13, M-16)

* The frame S is at rest and the frame S' is moving with v along positive X-axis.
* A clock in S' gives out signals at an interval t_0.
* An observer in the frame S records this time interval as $t = \dfrac{t_o}{\sqrt{1 - \dfrac{v^2}{c^2}}}$.
* $t > t_0$
* To a stationary observer in S, the time interval appears to be lengthened by a factor $\dfrac{1}{\sqrt{1 - \dfrac{v^2}{c^2}}}$
* Example: The clocks in the moving space ships will appear to go slower than than the clocks on the earth.

7. Photo emissive cell (O-08, O-13)

www.Padasalai.Net

Photo emissive cell

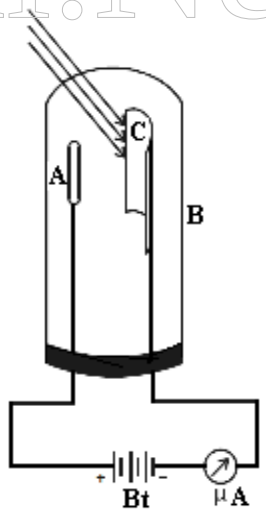

* B - Evacuated quartz or glass bulb.
* A - platinum wire - acts as anode(positive terminal).
* C - semi cylindrical metal plate - connected to negative of the battery (cathode)
* Inner surface of C is coated with low work function material like caesium oxide.
* When light of suitable wavelength is incident on C, photoelectric current is produced.
* Current is proportional to the intensity of th incident light.

BEST WISHES

http://www.trbtnpsc.com/2013/07/latest-12th-study-materials-2013.html

KANCHIPURAM EDUCATIONAL DISTRICT

+ 2 PHYSICS

www.Padasalai.Net

Minimum Learning Material for March -2017 Public Examination

http://www.trbtnpsc.com/2013/07/latest-12th-study-materials-2013.html

+2 Physics Unit: 1 Electrostatics

Ten Marks Minimum Learning Material

Page : 1

1. Electric field at any point on the equtorial line of an electric dipole

(M - 07, J - 09, O - 13, J - 15)

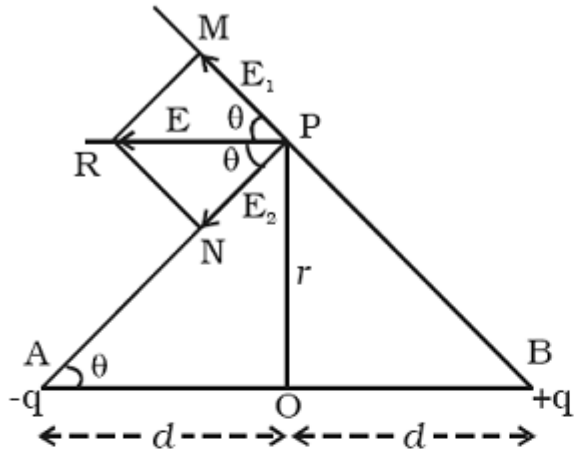

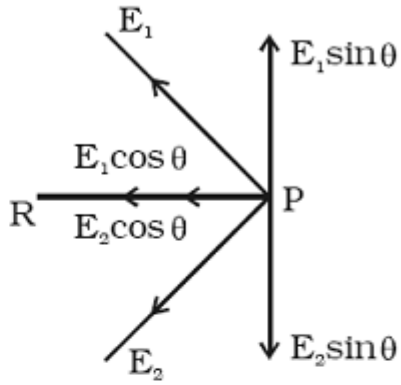

i) $$E_1 = \frac{1}{4\pi\varepsilon_o}\frac{q}{(r^2+d^2)} \quad \text{(along BP)}$$

ii) $$E_2 = \frac{1}{4\pi\varepsilon_o}\frac{q}{(r^2+d^2)} \quad \text{(along PA)}$$

iii) $$E = E_1 \cos\theta + E_2 \cos\theta \quad \text{(along PR)}$$

iv) $$E = 2\,E_1 \cos\theta \qquad (\because E_1 = E_2)$$

v) $$E = \frac{1}{4\pi\varepsilon_o}\frac{q}{(r^2+d^2)} \times 2\cos\theta$$

$$E = \frac{1}{4\pi\varepsilon_o}\frac{p}{r^3} \quad \text{(along PR)}$$

E acts in the opposite to the $\vec{p}$ and parallel to the axis of the dipole.

www.Padasalai.Net

http://www.trbtnpsc.com/2013/07/latest-12th-study-materials-2013.html

+2 Physics Unit: 1 Electrostatics

Ten Marks Minimum Learning Material

Page : 2

2. Electric potential at any point due to an electric dipole

(O - 06, M - 08, J - 08, M - 10, O - 11, M - 13, M - 15)

i) Electric Potential at P due to +q $V_1 = \frac{1}{4\pi\varepsilon_o}\frac{q}{r_1}$

ii) Electric Potential at P due to –q $V_2 = \frac{1}{4\pi\varepsilon_o}\left(-\frac{q}{r_2}\right)$

iii) Total Potential at P $V = V_1 + V_2 = \frac{1}{4\pi\varepsilon_o}\frac{q}{r_1} - \frac{1}{4\pi\varepsilon_o}\frac{q}{r_2}$

iv) $V = \frac{q}{4\pi\varepsilon_o}\left(\frac{1}{r_1} - \frac{1}{r_2}\right)$

www.Padasalai.Net

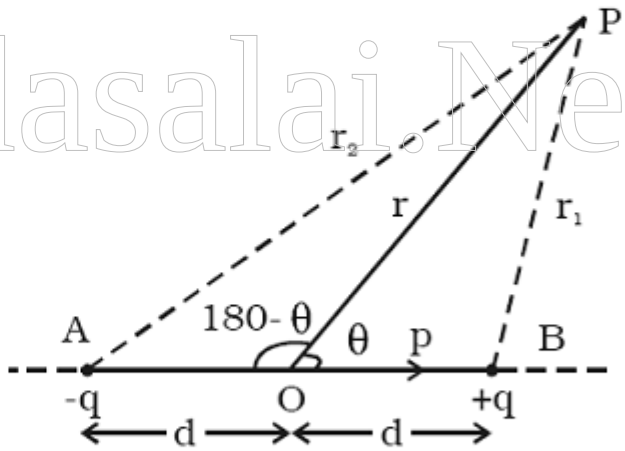

v) $\frac{1}{r_1} = \frac{1}{r}\left(1 + \frac{d}{r}\cos\theta\right)$

vi) $\frac{1}{r_2} = \frac{1}{r}\left(1 - \frac{d}{r}\cos\theta\right)$

vii) $V = \frac{q\,2d\cos\theta}{4\pi\varepsilon_o \,.\, r^2}$

$V = \frac{1}{4\pi\varepsilon_o}\frac{p\,.\cos\theta}{r^2} \quad \because p = q\,2d$

http://www.trbtnpsc.com/2013/07/latest-12th-study-materials-2013.html

+2 Physics Unit: 1 Electrostatics

Ten Marks Minimum Learning Material

3. Electric field at any point on the axial line of an electric dipole

(M - 06, J - 06, M - 09, J - 10, O - 10, M - 11, J - 14, M - 16)

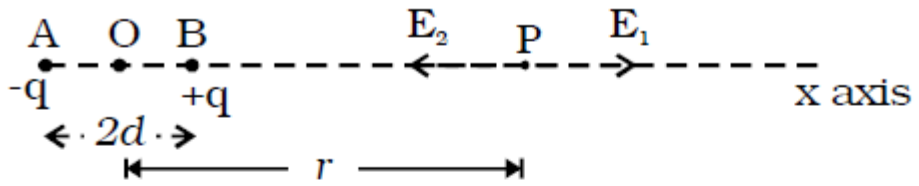

Electric field at P due to + q

$$E_1 = \frac{1}{4\pi\varepsilon_o}\frac{q}{(r-d)^2} \quad \text{(Along BP)}$$

Electric field at P due to - q

$$E_2 = \frac{1}{4\pi\varepsilon_o}\frac{q}{(r+d)^2} \quad \text{(Along PA)}$$

www.Padasalai.Net

$$E = E_1 + (-E_2)$$

$$E = \left[\frac{1}{4\pi\varepsilon_o}\frac{q}{(r-d)^2} - \frac{1}{4\pi\varepsilon_o}\frac{q}{(r+d)^2}\right] \quad \text{(Along BP)}$$

$$E = \frac{q}{4\pi\varepsilon_o}\left[\frac{4rd}{(r^2-d^2)^2}\right] \quad \text{(Along BP)}$$

If $d << r$,

$$E = \frac{1}{4\pi\varepsilon_o}\frac{2p}{r^3} \quad \text{(Along BP)} \quad (\because p = q \times 2d)$$

E acts in the direction of the $\vec{p}$.

http://www.trbtnpsc.com/2013/07/latest-12th-study-materials-2013.html

+2 Physics Unit: 1 Electrostatics

Ten Marks Minimum Learning Material

Page : 4

4. Van de Graaff generator (O - 08, O - 09, O - 12, M - 14, O - 15)

i) Principle: Electrostatic induction and action of points

ii) Applied voltage $= 10^4$ V

iii) Generating voltage $= 10^7$ V

iv) The leakage of charges can be reduced by enclosing the sphere in a gas filled steel chamber at a very high pressure.

v) Positve ions (protons and deuterons) can be accelerated.

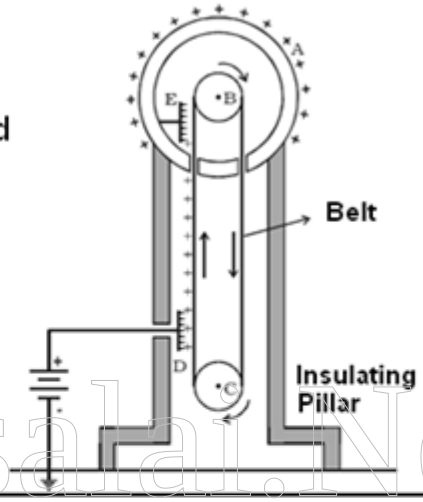

www.Padasalai.Net

5. Electric field due to an infinite long straight charged wire (J - 11, M - 12, J - 13)

i) Linear charge density $\lambda = \frac{q}{\ell}$

ii) The electric flux (ϕ) through curved surface $= \oint E\, ds \cos\theta$

iii) $\therefore$ Total flux $\phi = \oint E\, ds = E\,(2\pi r l)$

$[\because \theta = 0; \cos\theta = 1]$

iv) By Gauss's law, $E\,(2\pi r l) = \frac{\lambda l}{\varepsilon_o}$

v) $\therefore$ Electric field $E = \frac{\lambda}{2\pi\varepsilon_o r}$

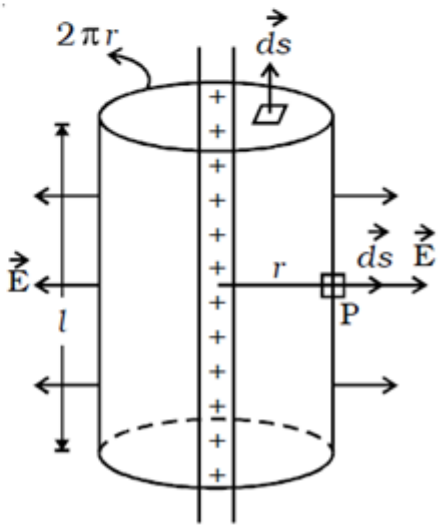

http://www.trbtnpsc.com/2013/07/latest-12th-study-materials-2013.html

Unit: 4 Electromagnetic Induction and Alternating current

Ten Marks Minimum Learning Material

1. Emf induced by changing the orientation of the coil

(J - 08, O - 09, J - 10, O - 11, M - 11, M - 13, O - 14, M - 15)

i) Magnetic flux $\phi = NBA \cos \theta$

ii) Induced emf $e = -\frac{d\phi}{dt} = -NBA\frac{d}{dt}\cos(\omega t)$

iii) $\therefore e = NBA\omega \sin \omega t$

iv) (i.e) $e = E_o \sin \omega t$ Here, $E_o = NAB\omega$

$\theta = \omega t$	Induced emf e
0	0
$\pi/2$	E_o
π	0
$3\pi/2$	$-E_o$
2π	0

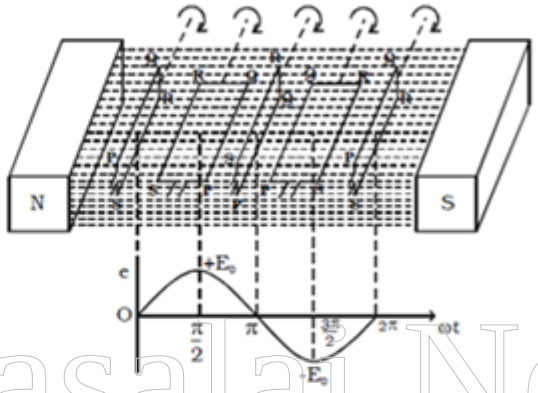

www.Padasalai.Net

2. AC Generator - Construction and working

(M -07,M -08,J -07,O -07,O -10,M -11,J -11,J -12,J -13,M -14,M -16)

i) Principle: Electromagnetic induction

ii) Parts:

1) Armature

2) Field magnet

3) Slip rings

4) Brushes

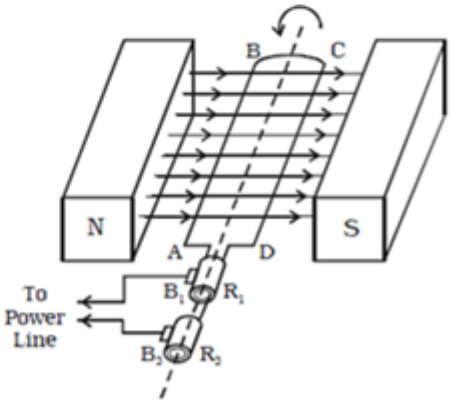

iii) Direction of the induced current: Fleming's right hand rule

iv) Induced emf $e = E_o \sin \omega t$

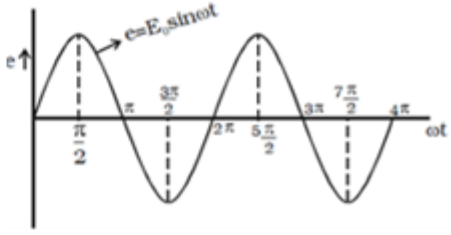

http://www.trbtnpsc.com/2013/07/latest-12th-study-materials-2013.html

+2 Physics Unit - 4 10 Marks

3. Transformer - working

(M - 06, M - 12, O - 13)

i) Principle : Electromagnetic induction

ii) $\frac{E_s}{E_p} = \frac{N_s}{N_p}$

iii) In an ideal transformer,

$E_p I_p = E_s I_s$

iv) $\frac{E_s}{E_p} = \frac{N_s}{N_p} = \frac{I_p}{I_s} = k$

Here, k = transformer ratio

v) For step-up transformer, $k > 1$

vi) For step-down trasformer, $k < 1$

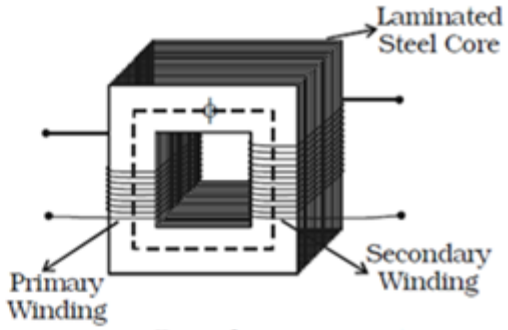

Transformer

4. RLC circuit - Current, Impedance and Phase relation

(J - 06, J - 09, O - 12, J - 14, J - 15, O - 15)

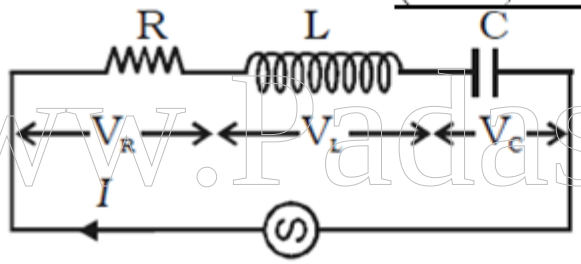

$e = E_0 \sin \omega t$

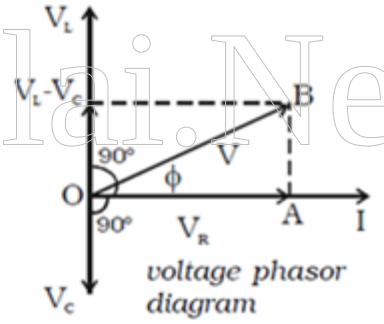

voltage phasor diagram

i) $V_R = IR$; $V_L = IX_L$; $VC = IX_C$

ii) $V^2 = V_R^2 + (V_L - V_C)^2$

iii) $V = I\sqrt{R^2 + (X_L - X_C)^2}$

iv) Impedance $Z = \frac{V}{I} = \sqrt{R^2 + (X_L - X_C)^2}$

v) $\tan \phi = \frac{X_L - X_C}{R}$

vi) Instantaneous current is $I_0 \sin(\omega t \pm \phi)$

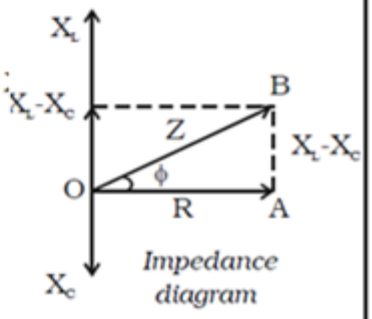

Impedance diagram

www.Padasalai.Net

http://www.trbtnpsc.com/2013/07/latest-12th-study-materials-2013.html